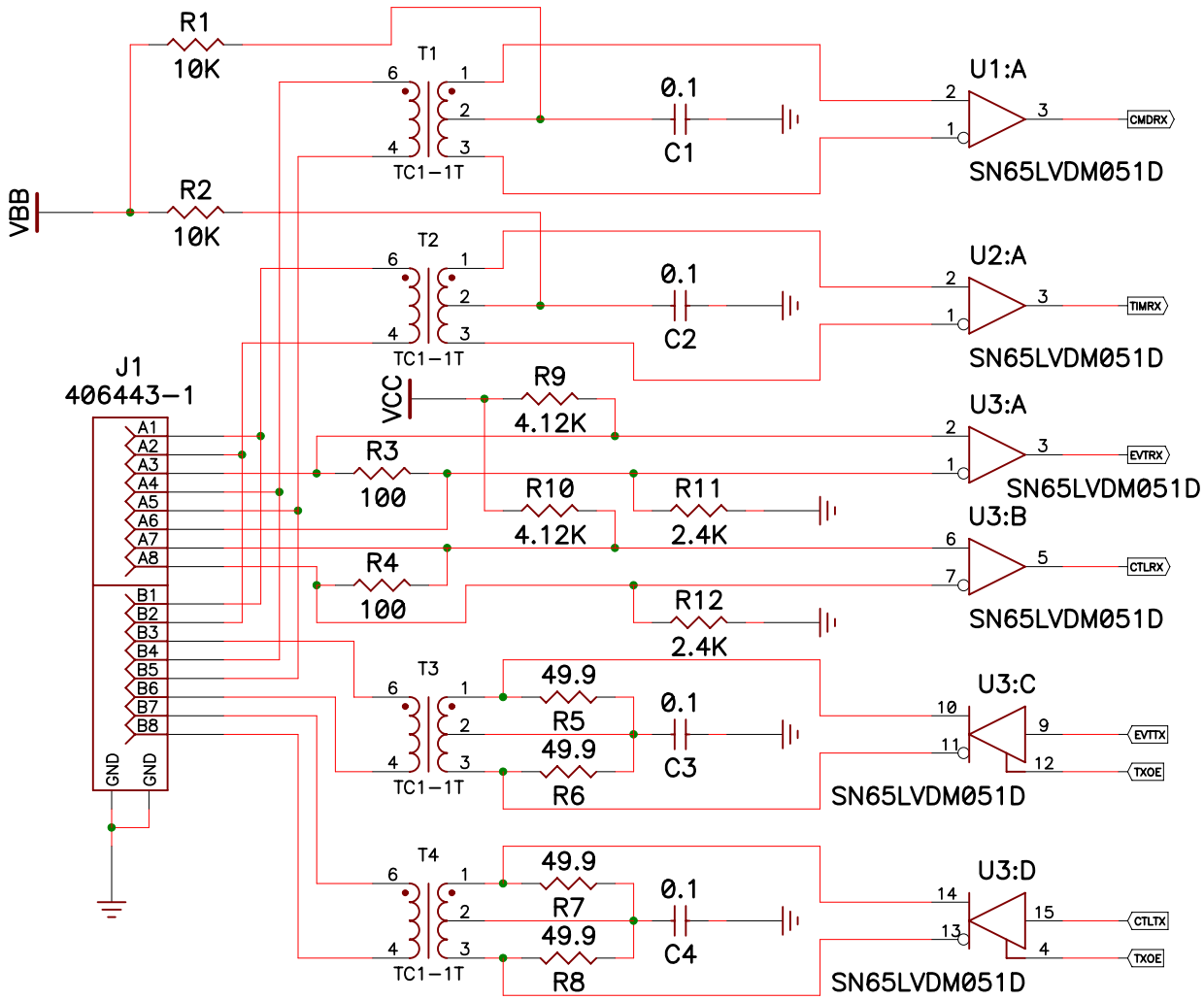EXAMPLE OF THE MIPP FRONT–END TRANSFORMER ISOLATION