REV	DESCRIPTION	DRAWN	DATE
		APPROVED	DATE

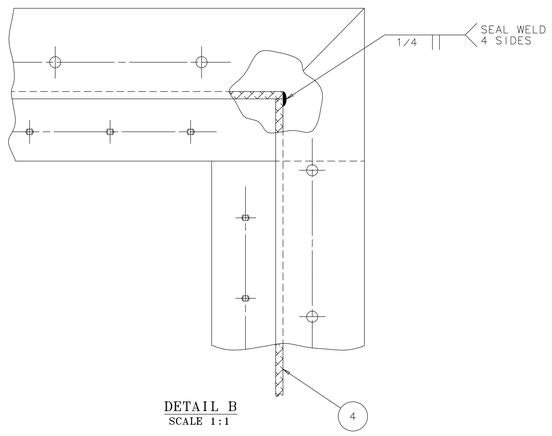

DETAIL B
SCALE 1:1

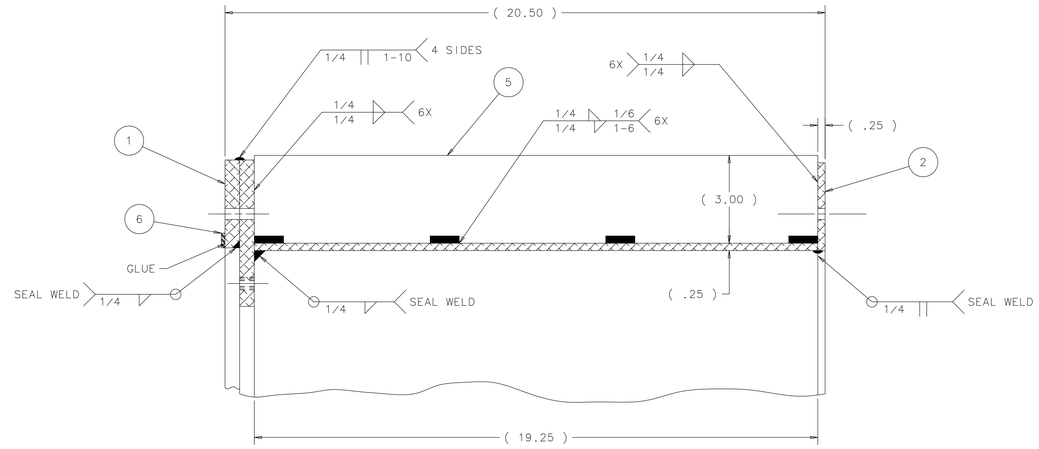

DETAIL A
SCALE 1:1

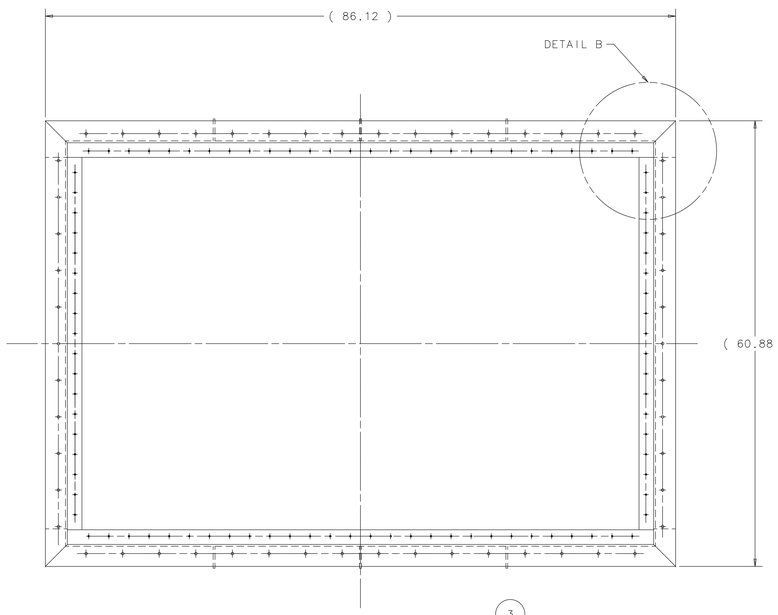

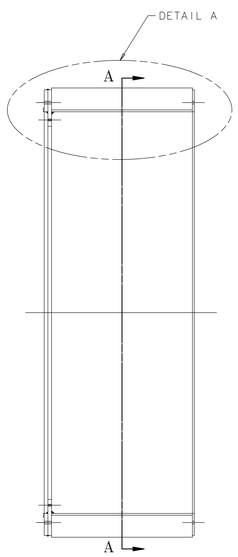

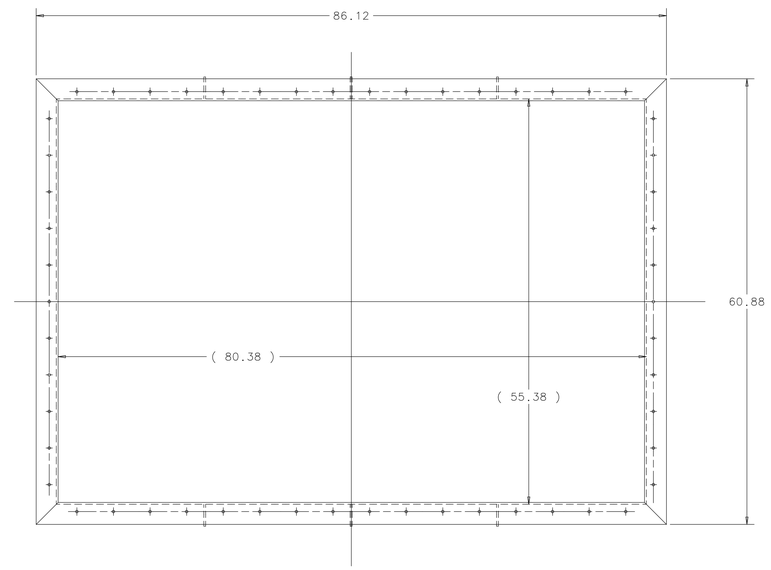

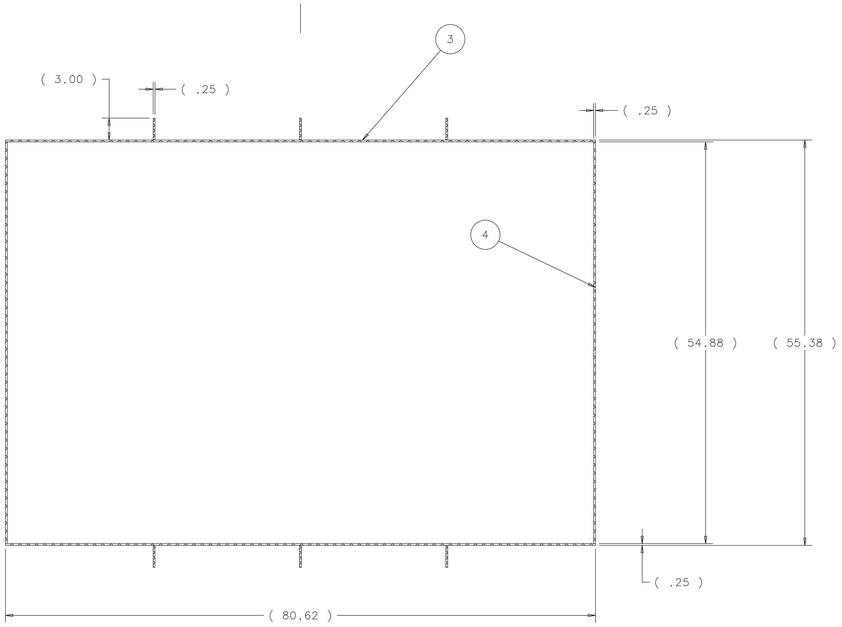

SECTION C-C

ITEM	PART NO.	DESCRIPTION OR SIZE	QTY.
6	COML	GASKET MATERIAL	AS REQD
5	COML	GUSSET PLATE 1/4 X 3.00 X 19.25 LG.	6
4	COML	SIDE PLATE 1/4 X 19.25 X 54.88 LG.	2
3	COML	TOP & BOTTOM PLATE 1/4 X 19.25 X 80.62 LG.	2
2	MD-421299	DOWNSTREAM FLANGE WELDMENT	1
1	MD-421296	UPSTREAM FLANGE WELDMENT	1

PARTS LIST

UNLESS OTHERWISE SPECIFIED			ORIGINATOR	J.KILMER	05-SEP-2007
.XX	.XXX	ANGLES	DRAWN	G.SMITH	05-SEP-2007
± ---	± ---	± ---	CHECKED		
			APPROVED		

1. BREAK ALL SHARP EDGES .015 MAX.
2. DO NOT SCALE DRAWING.
3. DIMENSIONS BASED UPON ASME Y14.5M-1994
4. MAX. ALL MACH. SURFACES 125
5. DRAWING UNITS: U.S. INCH

USED ON: ME-397568

MATERIAL: SEE PARTS LIST ABOVE

FERMI NATIONAL ACCELERATOR LABORATORY
UNITED STATES DEPARTMENT OF ENERGY

PPD/MECHANICAL DEPT.
E907 M-CENTER BEAMLINE
CERENKOV EXTENSION BOX

SCALE	DRAWING NUMBER	SHEET	REV
1:8 & & NOTED	3907.500-ME-421295	1 OF 1	

CREATED WITH : Ideas12NXSeries GROUP: PPD/MECHANICAL DEPARTMENT

Created: 07:39:52 on 05-10-07 (D-M-Y) By: gsmith State: 1-INITIAL