REV	DESCRIPTION	DRAWN	DATE
		APPROVED	DATE

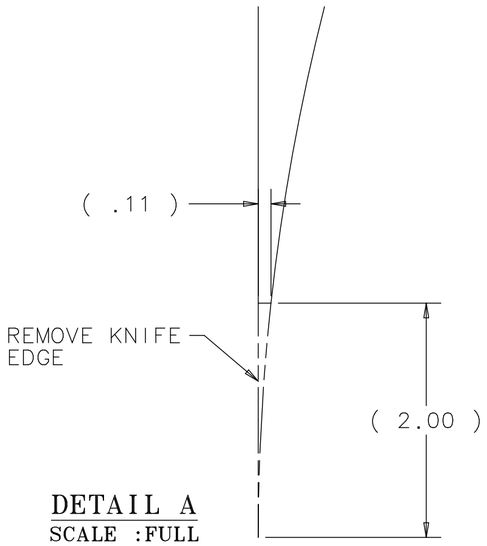

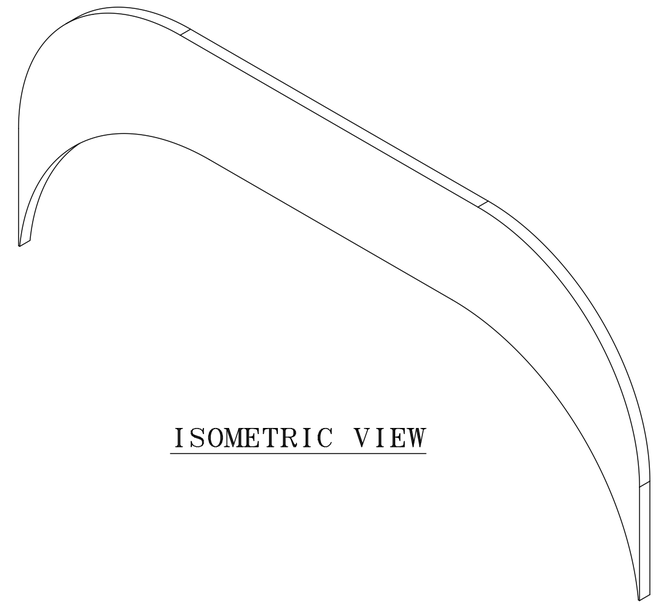

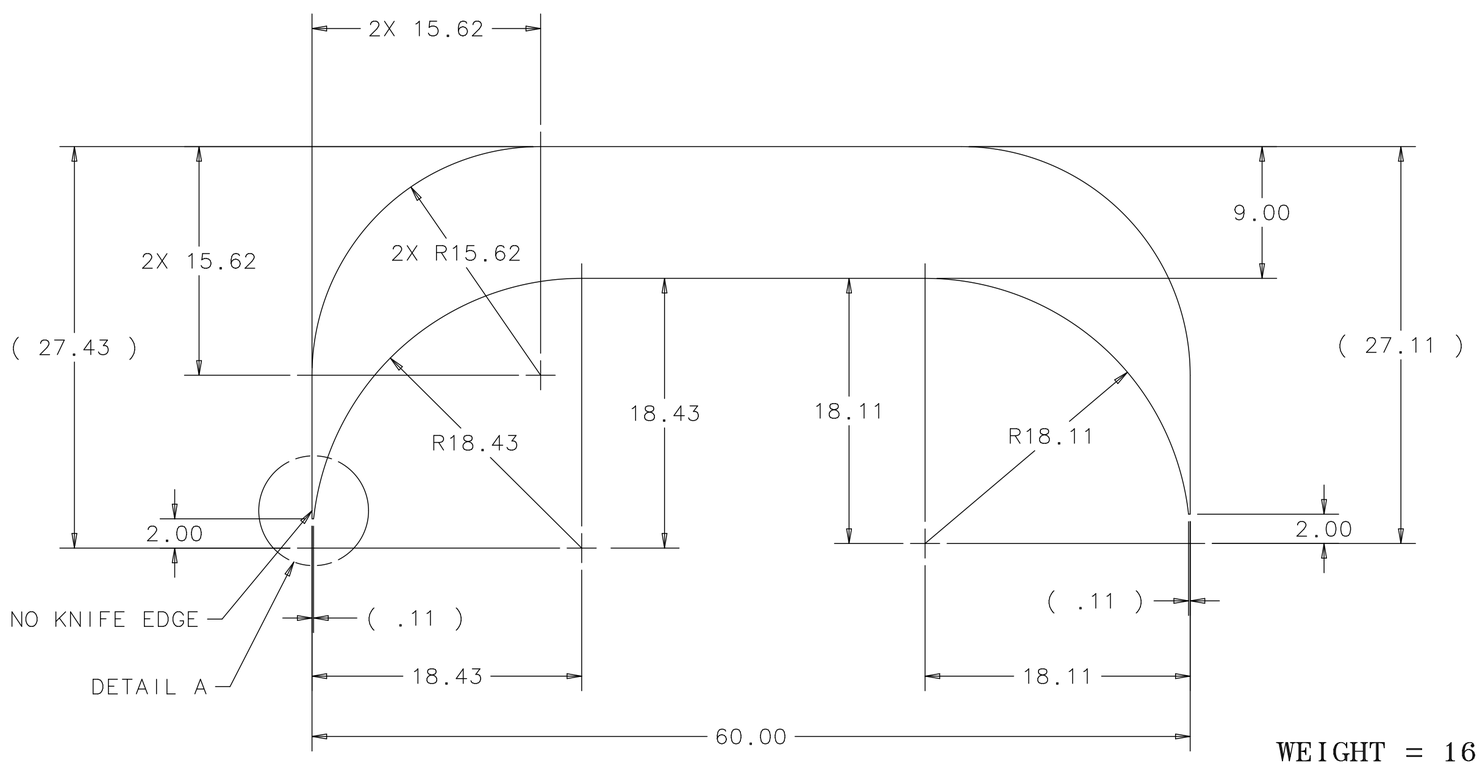

WEIGHT = 163 LBS.

NOTE: FLAME CUT PERMITTED

UNLESS OTHERWISE SPECIFIED			ORIGINATOR	J.KILMER	08-AUG-2007
.XX	.XXX	ANGLES	DRAWN	G.SMITH	08-AUG-2007
± .06	± ---	± ---	CHECKED	C.GROZIS	09-AUG-2007
			APPROVED	J.KILMER	09-AUG-2007

1. BREAK ALL SHARP EDGES .015 MAX.
2. DO NOT SCALE DRAWING.
3. DIMENSIONS BASED UPON ASME Y14.5M-1994
4. MAX. ALL MACH. SURFACES 250
5. DRAWING UNITS: U.S. INCH

USED ON: ME-421264

MATERIAL: 1006 STEEL 1" THICK

FERMI NATIONAL ACCELERATOR LABORATORY
UNITED STATES DEPARTMENT OF ENERGY

E907/MAGNETS JOLLY GREEN GIANT POLE PIECE EXTENSION-THIN

SCALE	DRAWING NUMBER	SHEET	REV
1:8 & AS NOTED	3907.530-MC-421281	1 OF 1	

CREATED WITH : Ideas12NXSeries | GROUP: PPD/MECHANICAL DEPARTMENT