REV	DESCRIPTION	DRAWN	DATE
		APPROVED	DATE

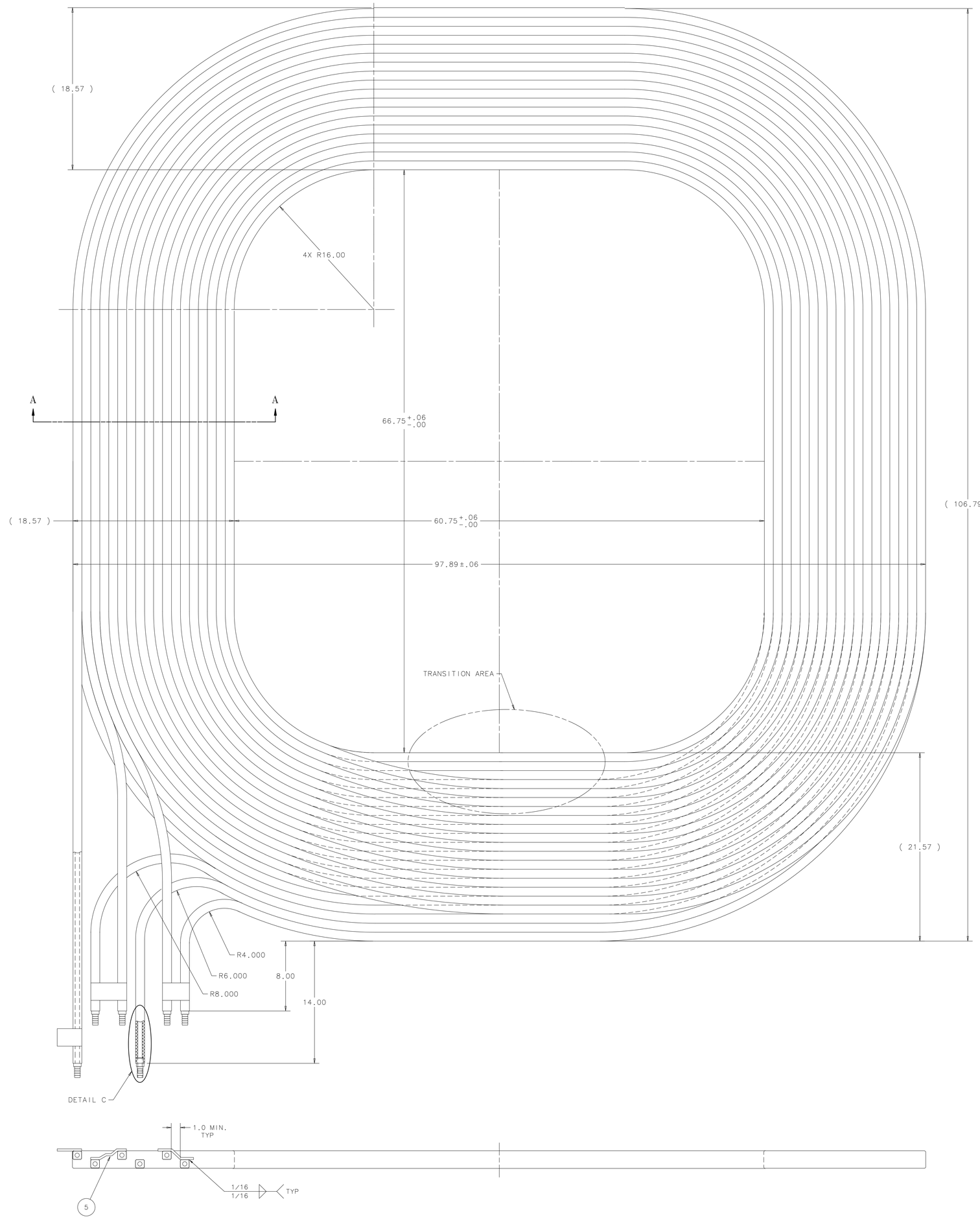

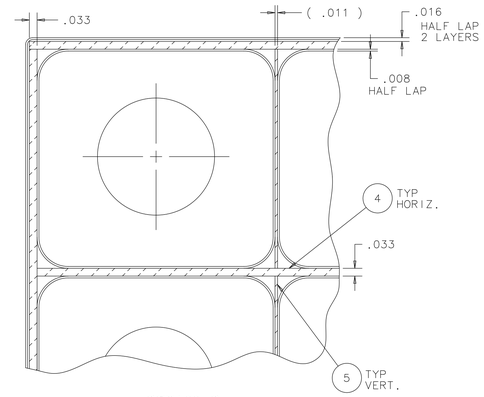

DETAIL D
SCALE: 2:1

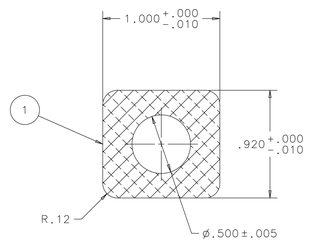

CONDUCTOR CROSS SECTION
SCALE: 2:1

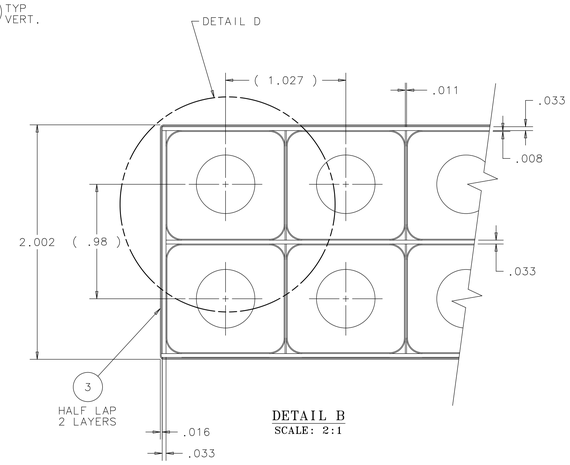

DETAIL B
SCALE: 2:1

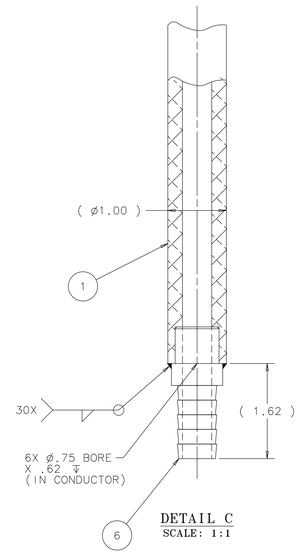

DETAIL C
SCALE: 1:1

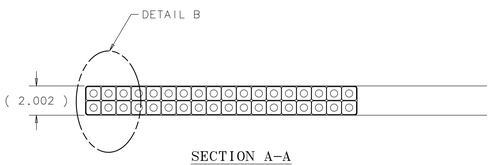

SECTION A–A

NOTES:

1. COIL 2 LAYERS, 18 TURNS = 36 TOTAL TURNS.
2. EACH LAYER HAS 3 INLET WATER PATHS AND 3 OUTLET WATER PATHS.
3. FINAL TAPING NOT SHOWN IN TOP VIEW FOR CLARITY.
4. FILE WELD FLUSH ALL ROUND, DO NOT BURN THROUGH.
5. THE FERRULE IS SLIGHTLY UNDERSIZE TO ALLOW FOR EXPANSION DURING WELDING.

WEIGHT = 711 LBS.

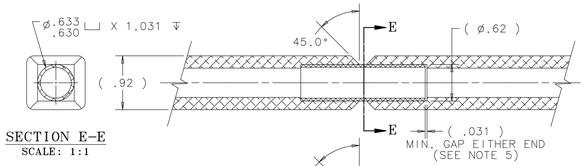

SECTION E–E
SCALE: 1:1

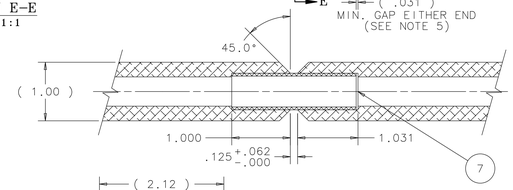

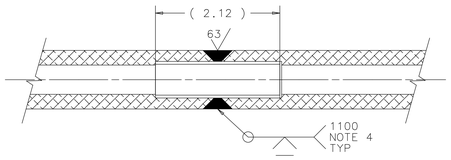

WELD JOINT DETAIL
SCALE: 1:1

ITEM	PART NO.	DESCRIPTION OR SIZE	QTY.
7	COML	FERRULE- STAINLESS STEEL TUBING 5/8 O.D. X .049 WALL X 2.12 LG.	1
6	MB-431263	BARBED HOSE WATER CONNECTION	6
5	COML	SCOTCH PLY .011" THK.	AS REQD
4	COML	SCOTCH PLY .033" THK.	AS REQD
3	COML	B-STAGE POLYESTER/GLASS TAPE 2" WIDE X .004 THK.	AS REQD
2	MB-421262	ALUMINUM BUS BAR	2
1	COML	ALUMINUM CONDUCTOR 1.00" X .920"	AS REQD

PARTS LIST

UNLESS OTHERWISE SPECIFIED			ORIGINATOR	J.KILMER	23-JUL-2007
.XX	.XXX	ANGLES	DRAWN	G.SMITH	23-JUL-2007
± .06	± ---	± ---	CHECKED	C.GROZIS	25-JUL-2007
			APPROVED	J.KILMER	25-JUL-2007

1. BREAK ALL SHARP EDGES .015 MAX.
2. DO NOT SCALE DRAWING.
3. DIMENSIONS BASED UPON ASME Y14.5M-1994
4. MAX. ALL MACH. SURFACES √
5. DRAWING UNITS: U.S. INCH

USED ON: ---

MATERIAL: SEE PARTS LIST ABOVE

FERMI NATIONAL ACCELERATOR LABORATORY
UNITED STATES DEPARTMENT OF ENERGY

E907/MAGNETS
JOLLY GREEN GIANT
COIL WINDING (1) PASS

SCALE	DRAWING NUMBER	SHEET	REV
1:4 AS NOTED	3907.530-ME-421275	1 OF 1	

CREATED WITH : Ideas12NXSeries GROUP: PPD/MECHANICAL DEPARTMENT