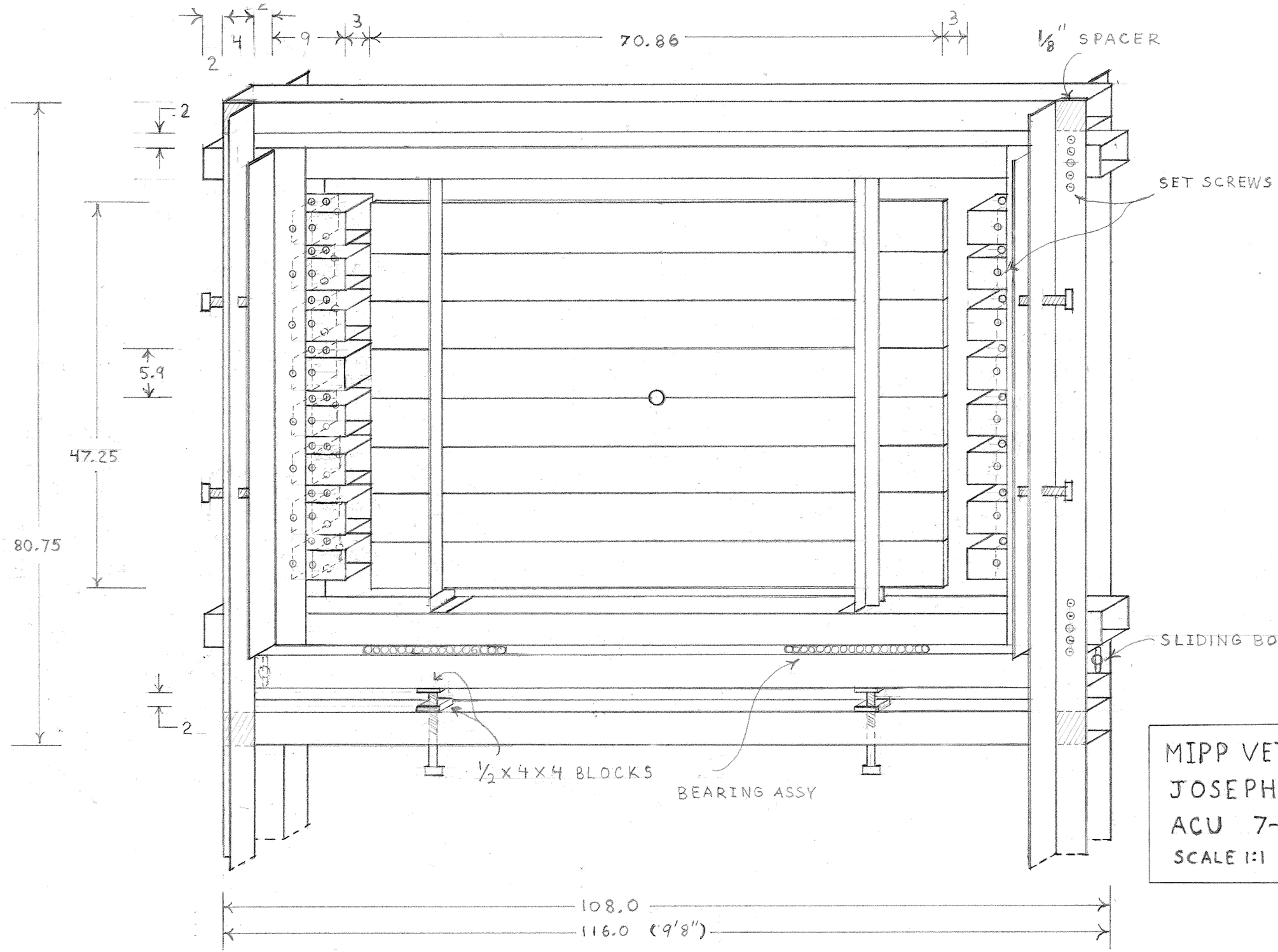

MIPP VETO WALL
JOSEPH KISH
ACU 7-9-07
SCALE 1:1 (INCHES)