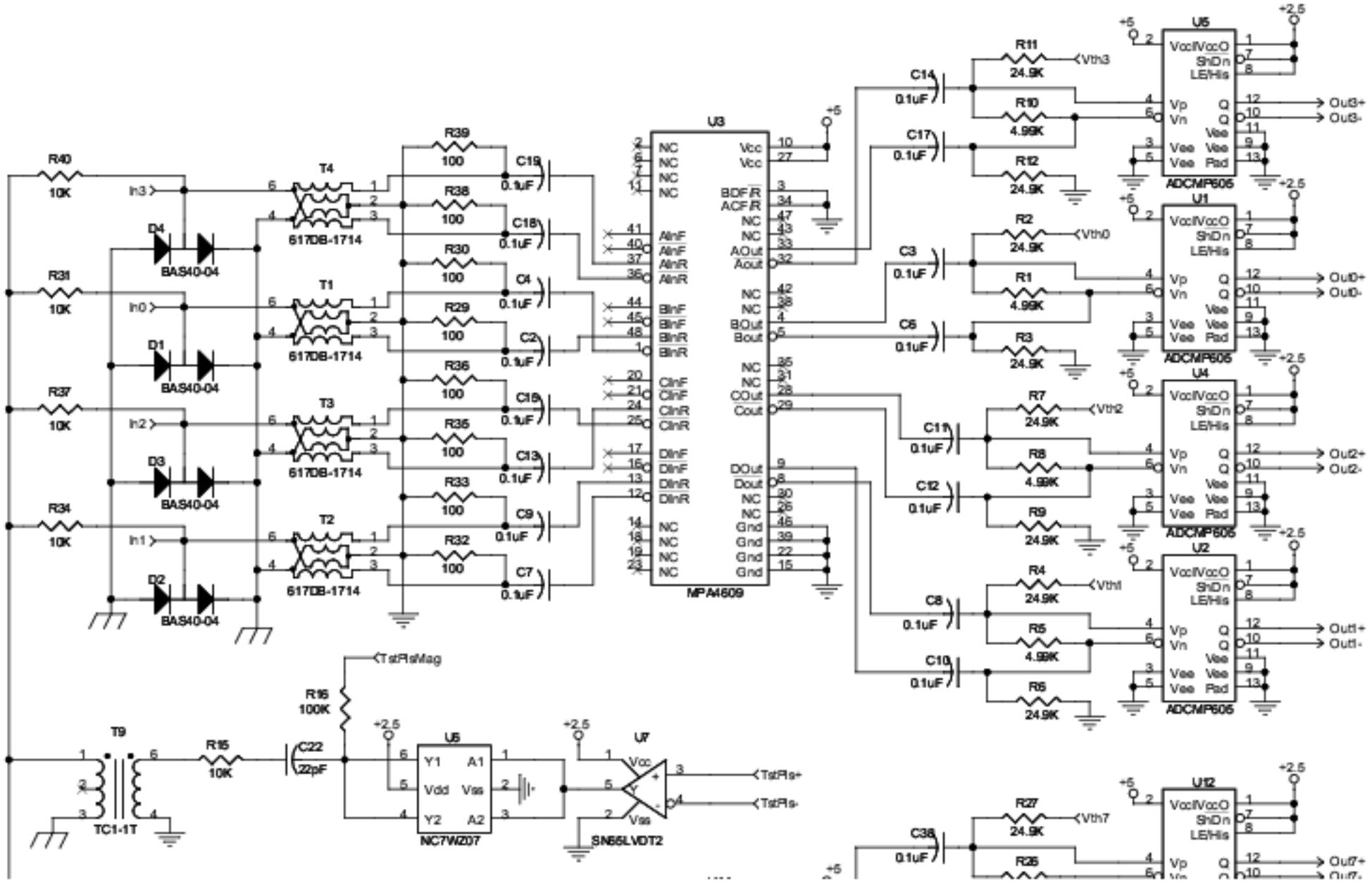
U3
MPA4609
U5
ADCMP606
U1
ADCMP606
U4
ADCMP606
U2
ADCMP606
U12
T4
T1
T3
T2
617DB-1714
BAS40-04
T9
TC1-1T
NC7WZ07
SN65LVDT2
TstRisMag
TstRis+
TstRis-
Out3+
Out3-
Out0+
Out0-
Out2+
Out2-
Out1+
Out1-
Out7+
Vth3
Vth0
Vth2
Vth1
Vth7
In3
In0
In2
In1
+5
+2.5

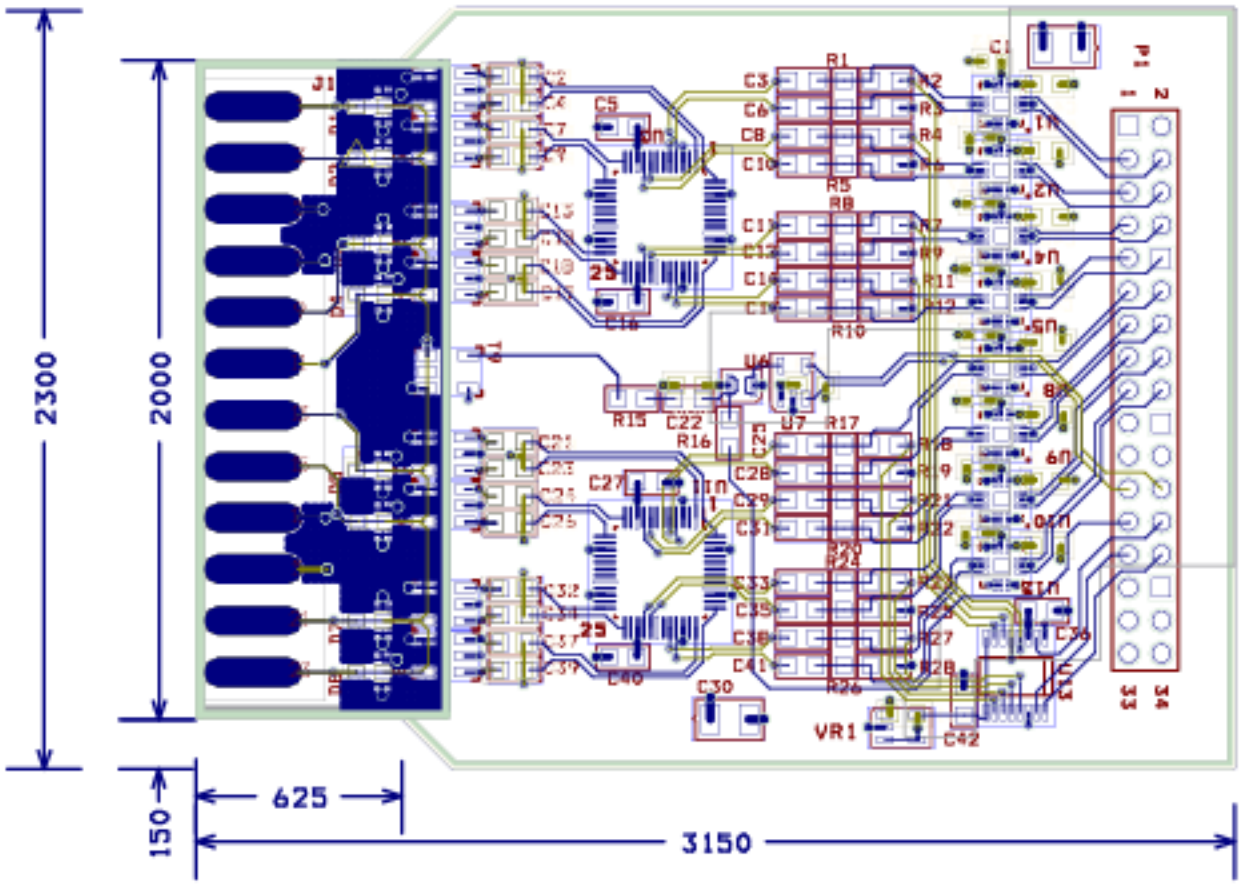
2300
2000
150
625
3150
J1
C5
C16
C27
C40
C30
C42
R1
R5
R8
R10
R15
R16
R17
R26
C22
U6
U7
VR1
P1
1
2
33
34

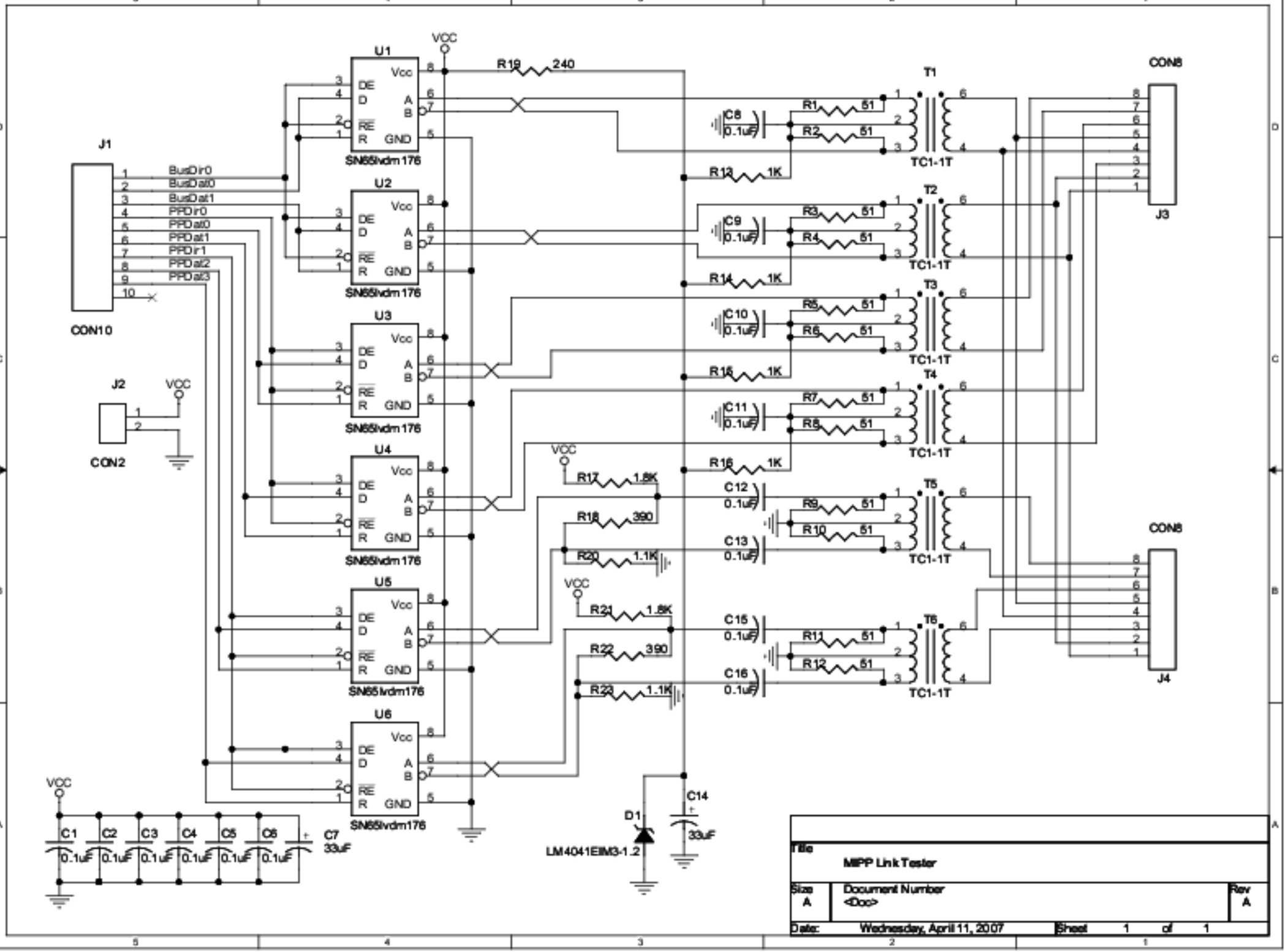
J1
CON10
BusDir0
BusDat0
BusDat1
PPDir0
PPDat0
PPDat1
PPDir1
PPDat2
PPDat3
J2
CON2
VCC
U1
U2
U3
U4
U5
U6
SN65lvdm176
Vcc
DE
D
RE
R
GND
A
B
R19 240
R13 1K
R14 1K
R15 1K
R16 1K
R17 1.8K
R18 390
R20 1.1K
R21 1.8K
R22 390
R23 1.1K
C8 0.1uF
C9 0.1uF
C10 0.1uF
C11 0.1uF
C12 0.1uF
C13 0.1uF
C15 0.1uF
C16 0.1uF
R1 51
R2 51
R3 51
R4 51
R5 51
R6 51
R7 51
R8 51
R9 51
R10 51
R11 51
R12 51
T1
T2
T3
T4
T5
T6
TC1-1T
CON8
J3
J4
C1 0.1uF
C2 0.1uF
C3 0.1uF
C4 0.1uF
C5 0.1uF
C6 0.1uF
C7 33uF
D1
LM4041EIM3-1.2
C14 33uF
Title
MIPP Link Tester
Size A
Document Number
<Doc>
Rev A
Date: Wednesday, April 11, 2007
Sheet 1 of 1

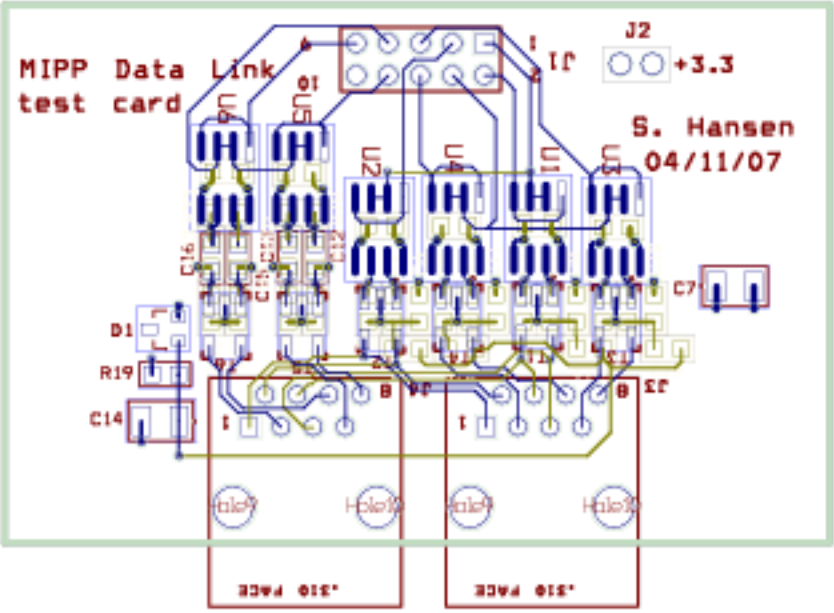
MIPP Data Link
test card
S. Hansen
04/11/07
J2
+3.3
J1
U1
U2
U3
U4
U5
U6
C7
D1
R19
C14
J3
J4
Hole9
Hole10
.310 PACE